TKH-MOUSE-IND-SCROLL-IP68-BLACK-LASER

INDUMOUSE

TKH-MOUSE-IND-SCROLL-IP68-GREY-LASER

INDUMOUSE

PRODUCT FEATURES

- Industrial mouse with aluminium bottom plate and laser scanning
- Ergonomical function with two mouse buttons and three-button scroll-function
- Resolution adjustable in 4 levels from 400 to 1600 cpi
- Pleasant operating feeling
- Because of the symmetric shape its best suited for right- and left-handers
- Completely water- and dustproof
- Easy to clean and disinfect

SPECIFICATION

Number of Keys:	2 Mousebuttons, 3 Scrollbuttons	Bottom plate:	Aluminium
Switch technology:	Short travel keys	Housing colour:	grey, black
Operating force:	1.5 N	Interface:	USB
Switch travel:	0.3 mm	Operating temperature:	-25 °C to +70 °C
Protection level:	IP68	Storage temperature:	-25 °C to +80 °C
Scanning:	Laser	Scroll function:	by 3 Scrollbuttons
Resolution:	400, 800, 1200 or 1600 cpi (adjustable)	Weight:	180 g
		Cable length:	ca. 2 m
Housing:	Silicone rubber	Dimensions:	L 116.0 x W 62.0 x H 38.6 mm

Cat.No.	Product designation	Colour
KH19226	TKH-MOUSE-IND-SCROLL-IP68-GREY-LASER-USB	gray
KH19224	TKH-MOUSE-IND-SCROLL-IP68-BLACK-LASER-USB	black

Other layouts, configurations and interfaces on request.

ations and errors

TECHNICAL DRAWING

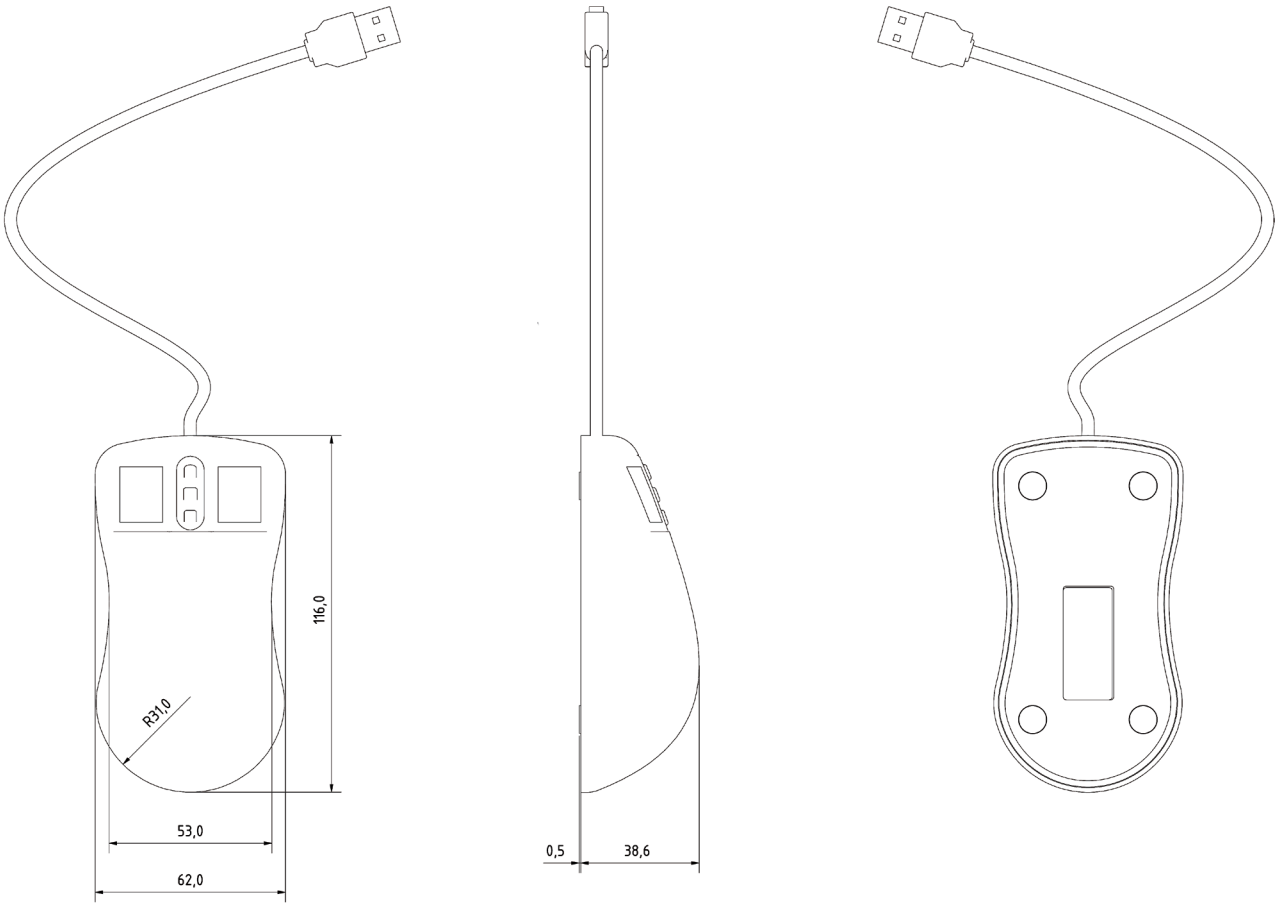

Mouse functions when using standard Windows® drivers

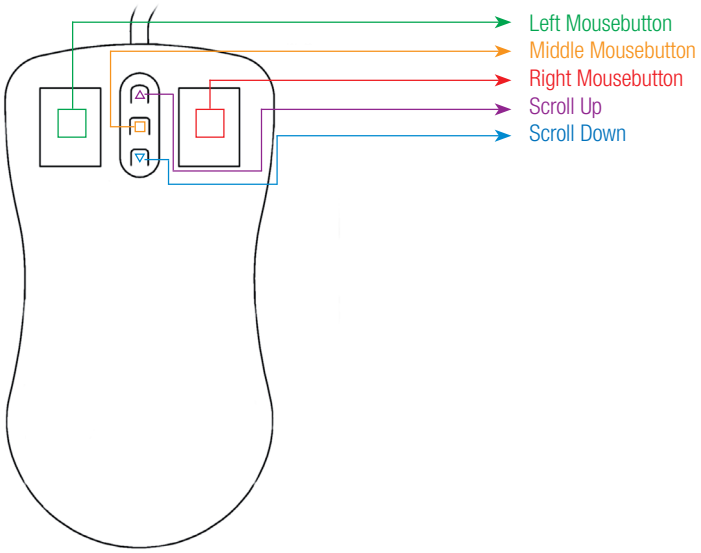

Resolution adjustment:

Resolution is adjustable in 4 levels: 400, 800, 1200 and 1600 cpi.
Keep left and right mousebutton pressed at once and adjust the resolution with the scrollbuttons:

* Scroll-up button: higher resolution
* Scroll-down button: lower resolution

Änderungen und Irrtümer vorbehalten! / Subject to modifications and errors