CIRCULAR ANTENNAS

MT-242014/NRH/K
865-870 MHZ, 8.5 DBIC RHCP READER ANTENNA

ELECTRICAL	
REGULATORY COMPLIANCE	RoHS, CE 0682
FREQUENCY RANGE	865-870 MHz
GAIN	8.5 dBic (min) , 9.5 dBic (max)
VSWR	1.3:1 (max)
POLARIZATION	RHCP
3dB ELEVATION BEAMWIDTH	65° (typ)
3dB AZIMUTH BEAMWIDTH	65° (typ)
SIDELOBES LEVEL @ ± 90°	-16 dB (max)
F/B RATIO	-18 dB (max) -20 dB (typ)
POWER	6W (max)
INPUT IMPEDANCE	50 (ohm)
AXIAL RATIO AT BORESIGHT	2 dB (max)
LIGHTNING PROTECTION	DC Grounded
MECHANICAL	
DIMENSIONS (LxWxD)	305 x 305 x 25mm (max)
CONNECTOR	N-Type Female
WEIGHT	1.2 (kg) (max)
MOUNTING KIT	SEE RD41191800C
RADOME MATERIAL	Plastic polycarbonate UV protected color RAL9002
BASE PLATE MATERIAL	Aluminum with chemical conversion coating
OUTLINE DRAWING	RD41946900C
ORIENTATION	Rectangular

ENVIRONMENTAL

TEST	STANDARD	DURATION	TEMPERTURE	NOTES
LOW TEMPERATURE	IEC 68-2-1	72 h	-55°C	
HIGH TEMPERATURE	IEC 68-2-2	72 h	+71°C	
TEMP. CYCLING	IEC 68-2-14	1 h	-45°C +70°C	3 Cycles
THERMAL SHOCK NONO-OPERATING			-30°C to+70°C	Ramp 30°C/min
HUMIDITY	ETSI EN300-2-4 T4.1E	144 h		95%
WATER TIGHTNESS	IEC 529			IP67
DUST RESISTANCE				IP67
SOLAR RADIATION	ASTM G53	1000h		
OZONE RESISTANCE	ETSI 300			
FLAMMABILITY	UL 94			Class HB
SALT SPRAY	IEC 68-2-11 Ka	500 h		
ICE AND SNOW				25mm Radial
WIND SPEED SURVIVAL OPERATION				220 Km/h 160 Km/h
WINDLOAD (SURVIVAL): FRONT THRUST SIDE THRUST				26.8 Kg 2.2 Kg
QUASI RANDOM VIBRATION				20g rms for 4 hours
VEHICLE VIBRATION OPERATING	1 grms, 10-500 Hz, in 3 axis			6 hours total, 2 hr in each axis. Accelerated wear – an additional 50hrs in worst case axis.
MECHANICAL SHOCK OPERATING	10g,11msec, half sine pulse			

*For outdoor installations that require mounting the antenna horizontally facing ground, please contact MTI representative for the dedicated P/N

AZIMUTH RADIATION PATTERN MIDBAND
FREQ. 0.867 GHZ

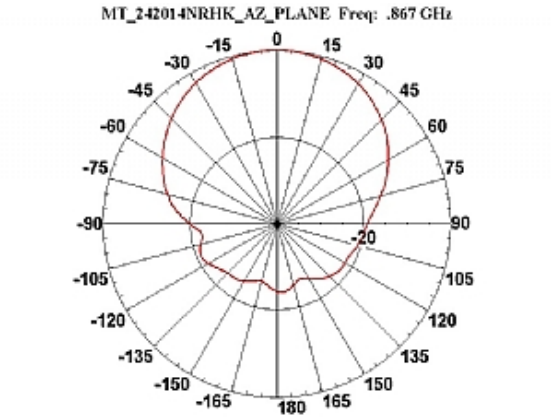

ELEVATION RADIATION PATTERN MIDBAND
FREQ. 0.867 GHZ

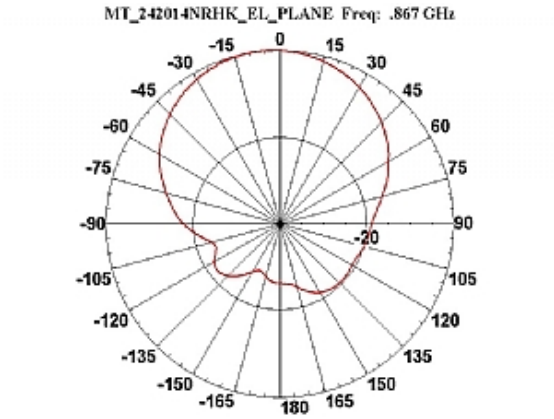

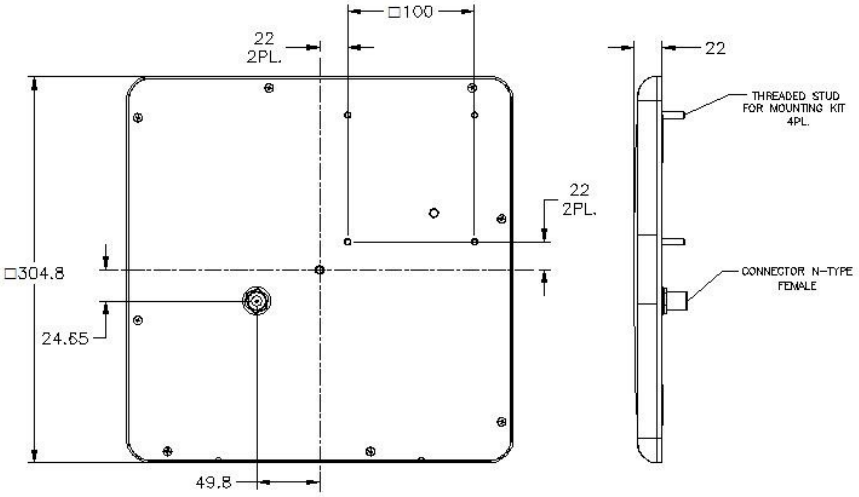

WAIVER!
While the information contained in this document has been carefully compiled to the best of our present knowledge, it is not intended as presentation or warranty of any kind on our part regarding the fitness of the products concerned for any particular use or purpose and neither shall any statement contained herein be construed as a recommendation to infringe any industrial property rights or as a license to use any such rights. The fitness of each product for any particular purpose must be checked beforehand with our specialists.

Microtron®
Flexible electronic solutions
Microtron n.v. | Generaal De Wittelaan 7 | B-2800 Mechelen | T +32 (0) 15 29 29 29 | info@microtron.be | www.microtron.be
Microtron b.v. | Hoevestein 11 | NL-4903 SE Oosterhout | T +31 (0) 162 44 72 72 | info@microtron.nl | www.microtron.nl